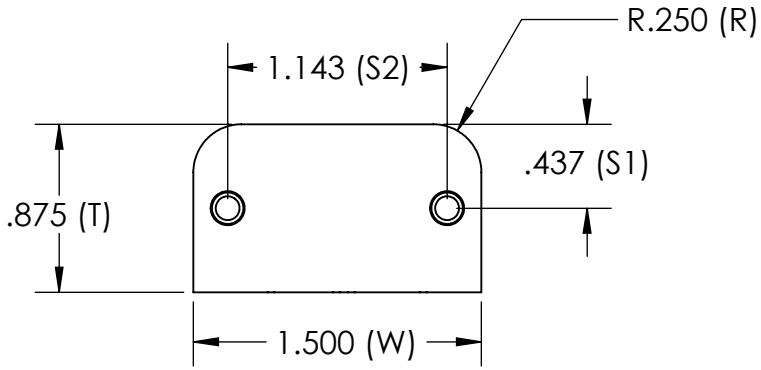
R.250 (R)
1.143 (S2)
.437 (S1)
.875 (T)
1.500 (W)

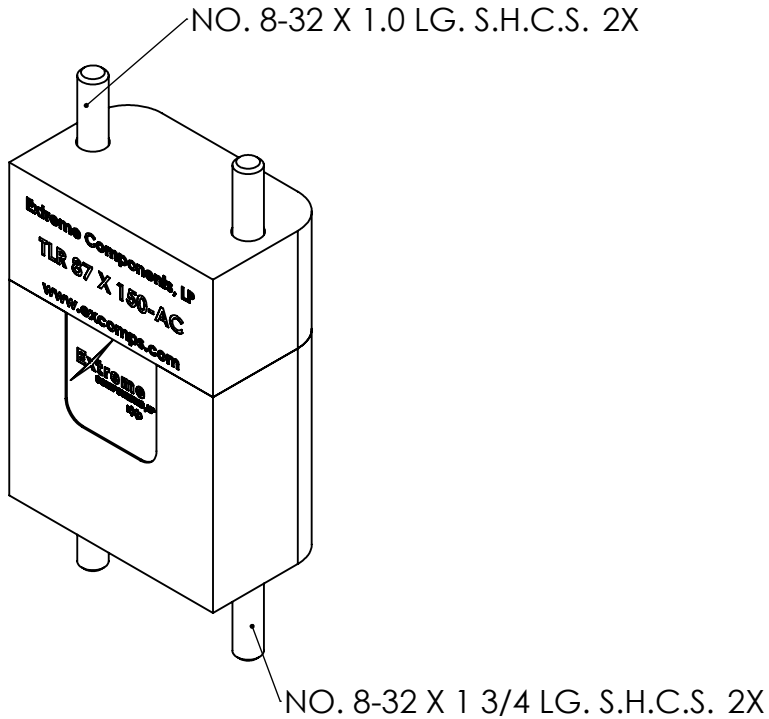
NO. 8-32 X 1.0 LG. S.H.C.S. 2X
Extreme Components, LP
TLR 87 X 150-AC
www.excomps.com
NO. 8-32 X 1 3/4 LG. S.H.C.S. 2X

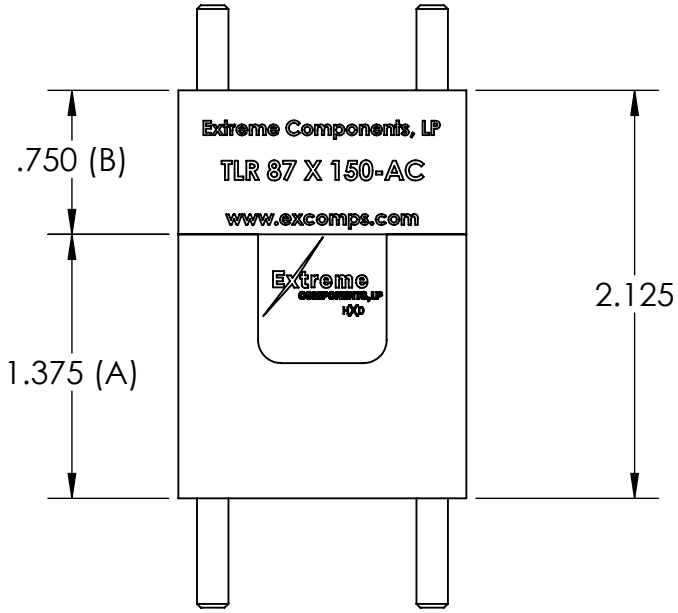
Extreme Components, LP
TLR 87 X 150-AC
www.excomps.com
.750 (B)
1.375 (A)
2.125