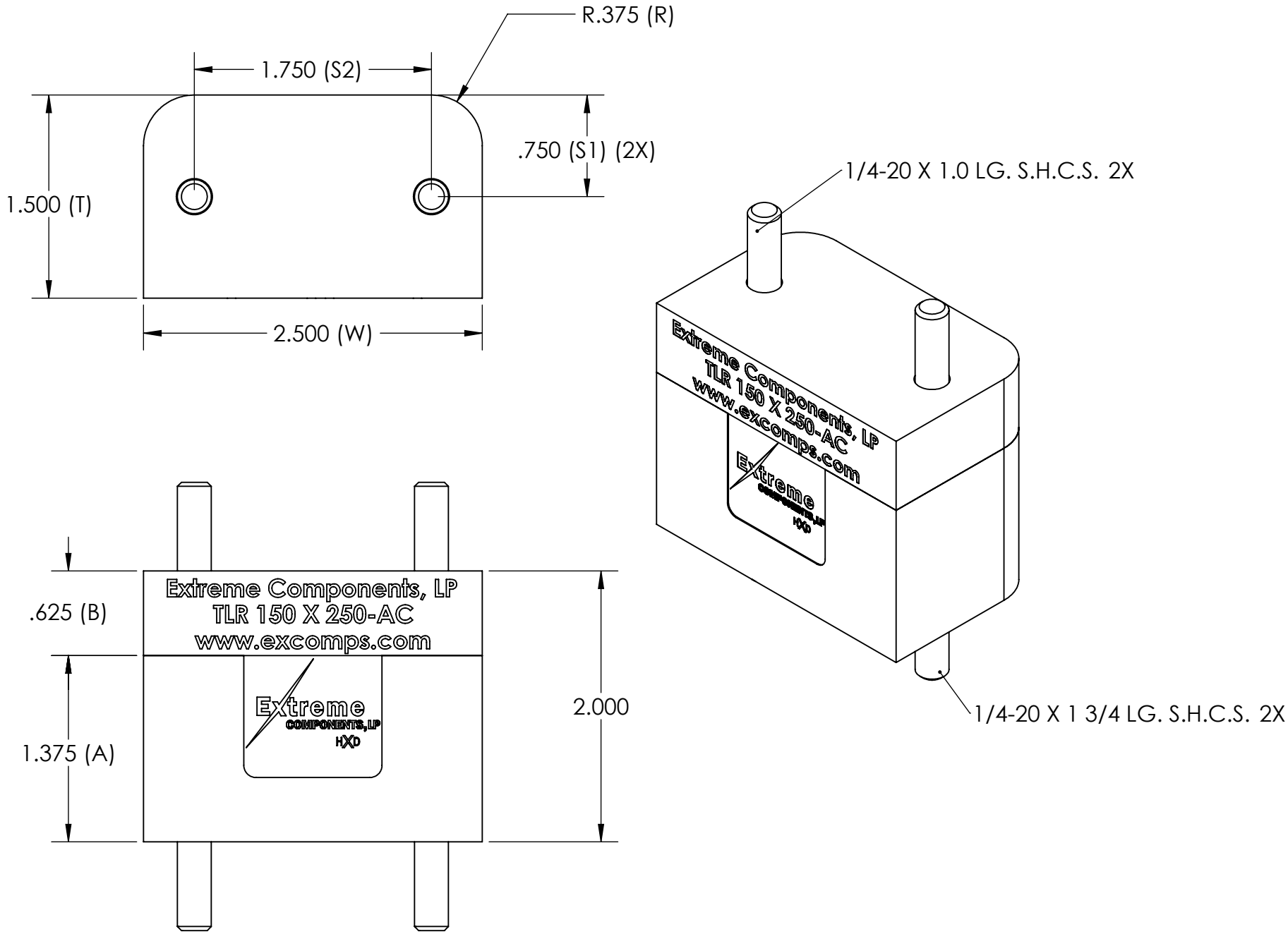
R.375 (R)
1.750 (S2)
.750 (S1) (2X)
1.500 (T)
2.500 (W)
1/4-20 X 1.0 LG. S.H.C.S. 2X
Extreme Components, LP
TLR 150 X 250-AC
www.excomps.com
Extreme
COMPONENTS, LP
HXD
1/4-20 X 1 3/4 LG. S.H.C.S. 2X
.625 (B)
1.375 (A)
2.000