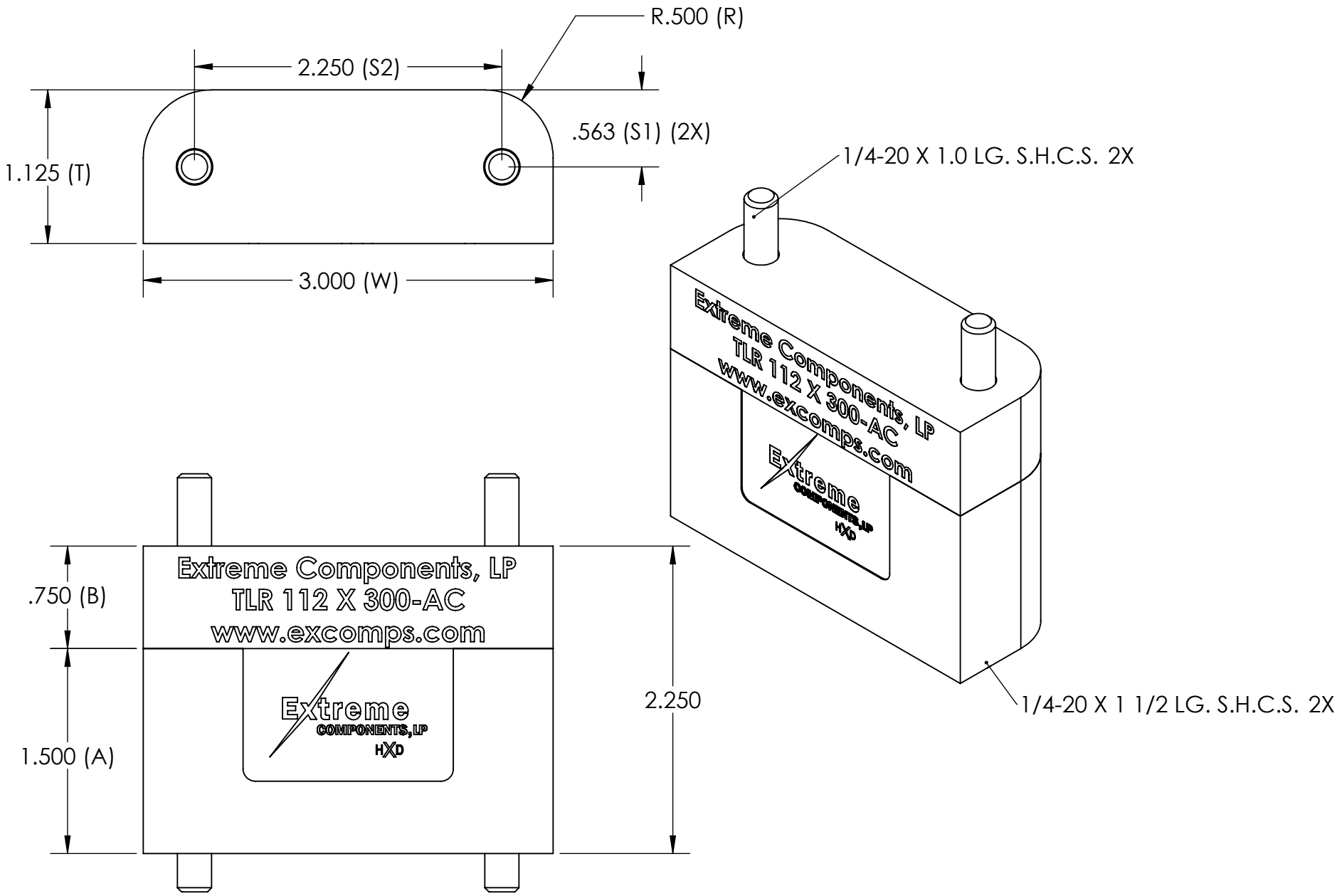
R.500 (R)
2.250 (S2)
.563 (S1) (2X)
1.125 (T)
3.000 (W)
1/4-20 X 1.0 LG. S.H.C.S. 2X
Extreme Components, LP
TLR 112 X 300-AC
www.excomps.com
Extreme
COMPONENTS, LP
HXD
1/4-20 X 1 1/2 LG. S.H.C.S. 2X
.750 (B)
1.500 (A)
2.250