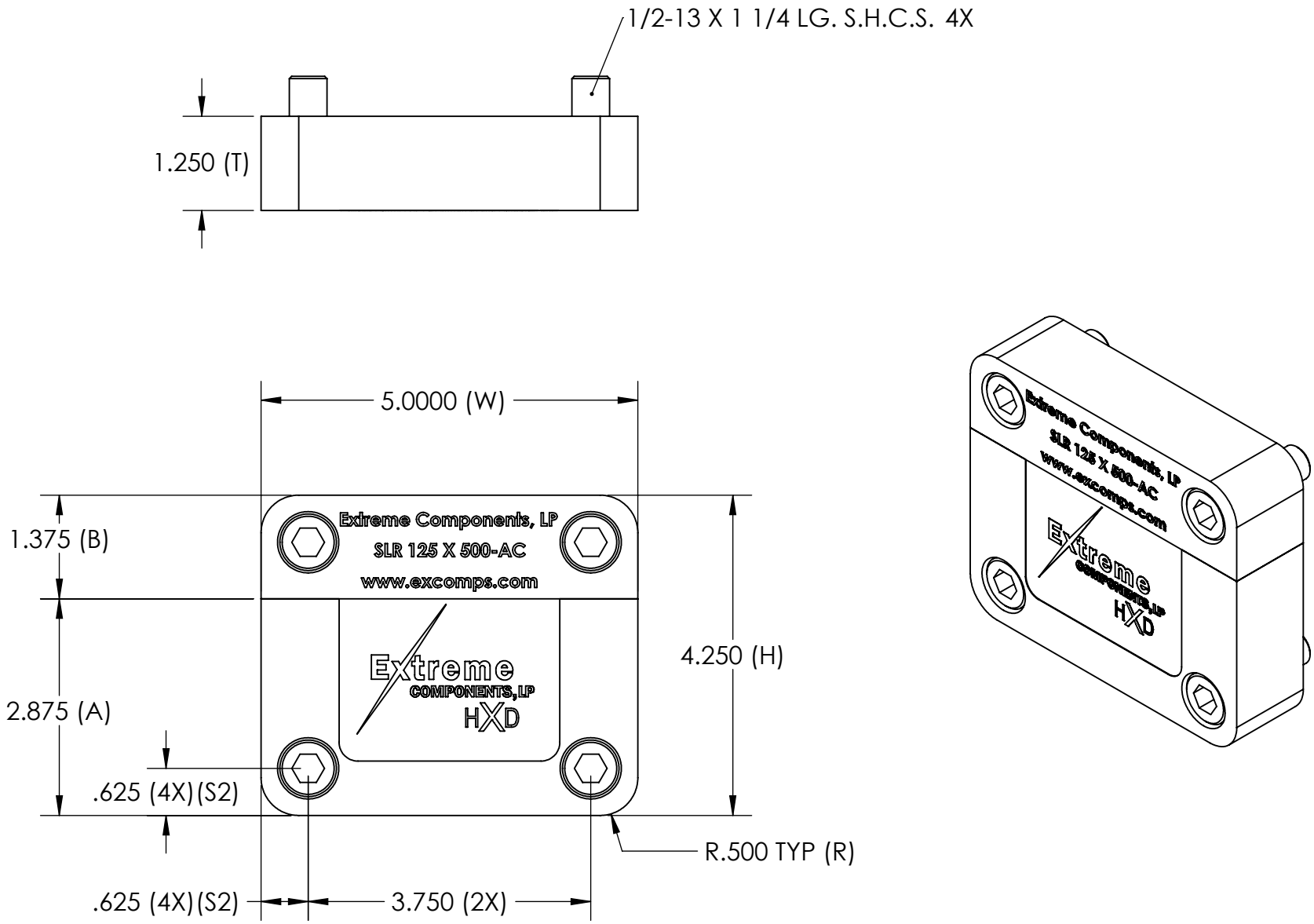
1/2-13 X 1 1/4 LG. S.H.C.S. 4X
1.250 (T)
5.0000 (W)
1.375 (B)
2.875 (A)
4.250 (H)
.625 (4X)(S2)
.625 (4X)(S2)
3.750 (2X)
R.500 TYP (R)
Extreme Components, LP
SLR 125 X 500-AC
www.excomps.com
Extreme
COMPONENTS,LP
HXD